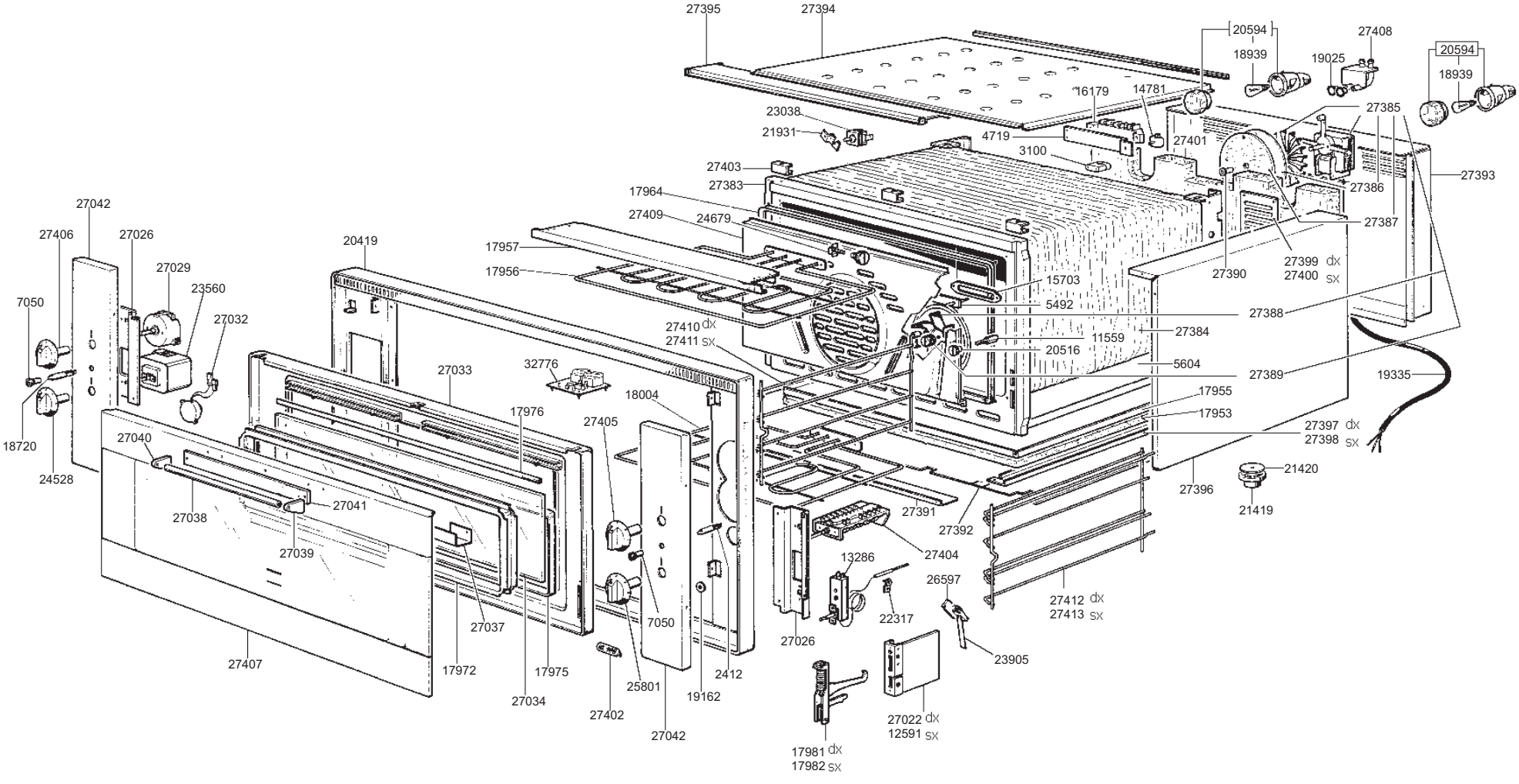
27395
27394
20594
18939
27408
19025
20594
18939
16179
14781
23038
21931
4719
27401
27385
3100
27403
27383
17964
27409
24679
27386
27387
27393
27042
27406
27026
27029
23560
27032
20419
17957
17956
27399 dx
27400 sx
27390
15703
5492
27388
7050
27410 dx
27411 sx
11559
27384
20516
5604
27389
19335
27033
32776
18004
17955
17976
27405
17953
27397 dx
27398 sx
18720
27040
24528
27396
21420
21419
27041
27038
27039
27391
27392
27404
13286
26597
27037
7050
22317
27412 dx
27413 sx
27026
23905
27407
17972
17975
25801
2412
19162
27034
27402
27042
27022 dx
12591 sx
17981 dx
17982 sx